NAO W

Floor Mount Flushometer Bowl, HET

Spare Parts Sheet

Kit of spare parts for preventive maintenance.

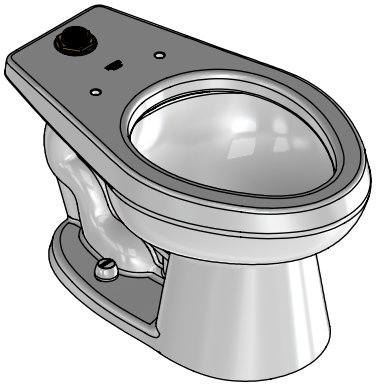

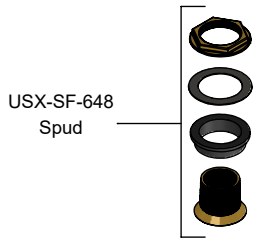

USX-SF-648
Spud

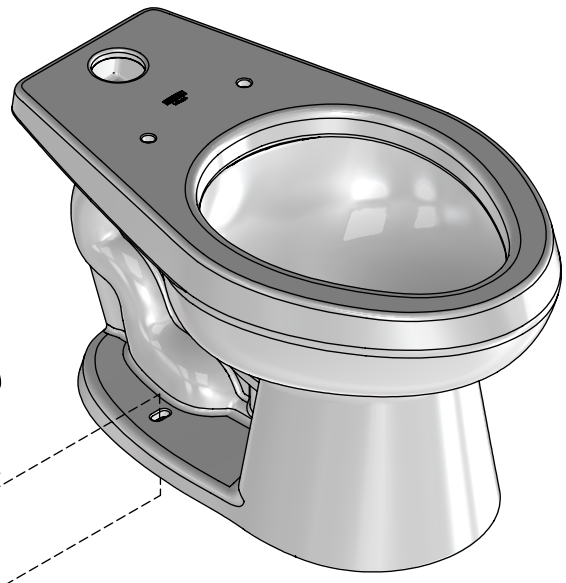

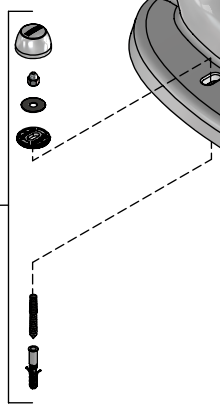

USX-SF-691
Floor Fixing Kit

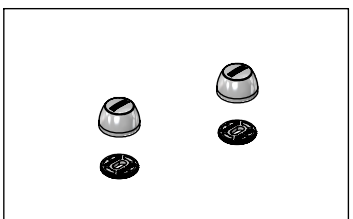

USX-SF-643
Lags Screw Cover Kit Tank
Toilet/Flux Toilet